Daily

(1,2L)

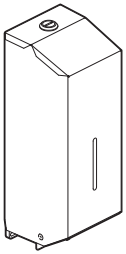

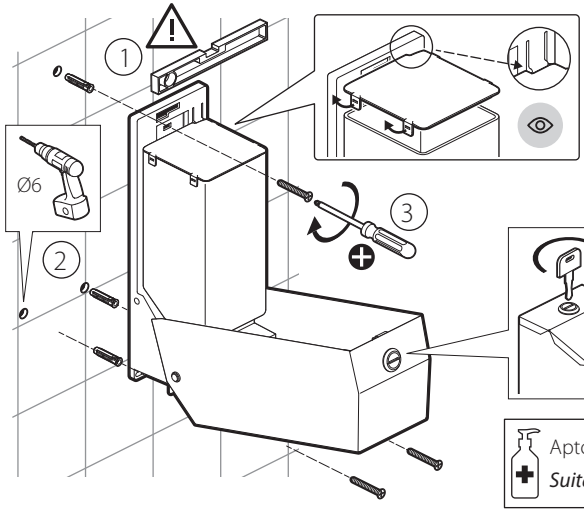

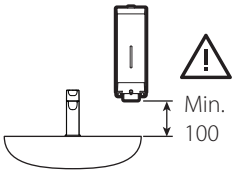

Apto para gel hidroalcohólico

Suitable for hydroalcoholic gel

(0,8L)

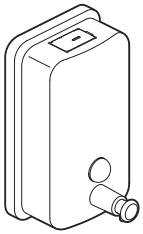

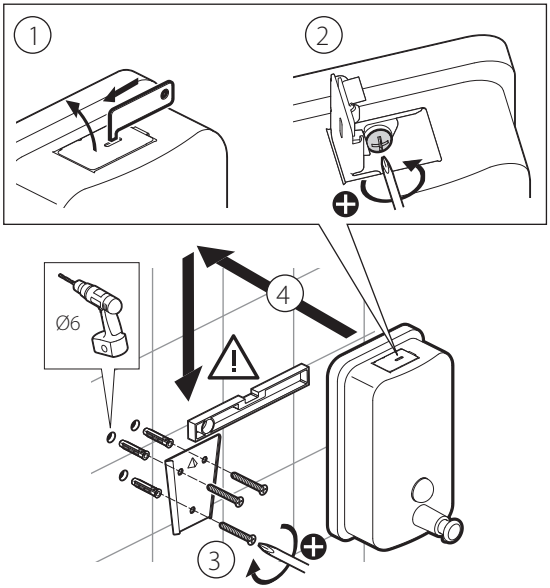

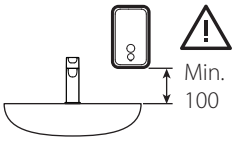

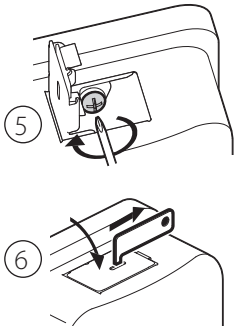

Sanitana

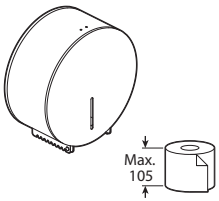

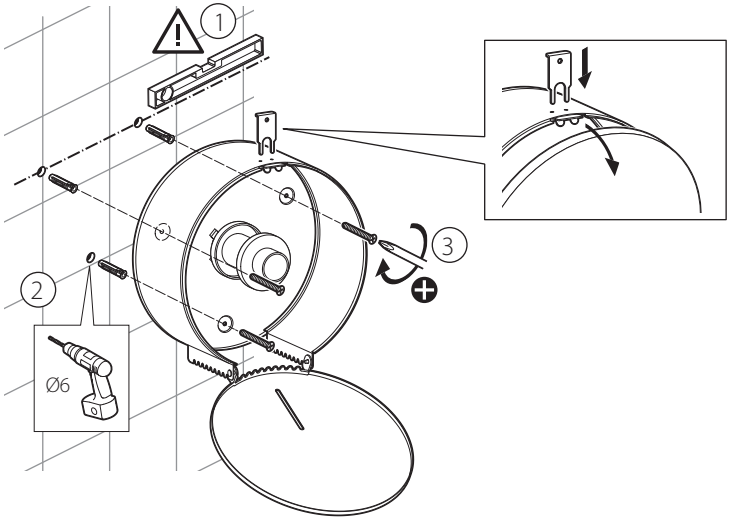

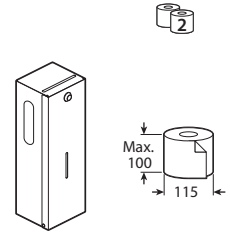

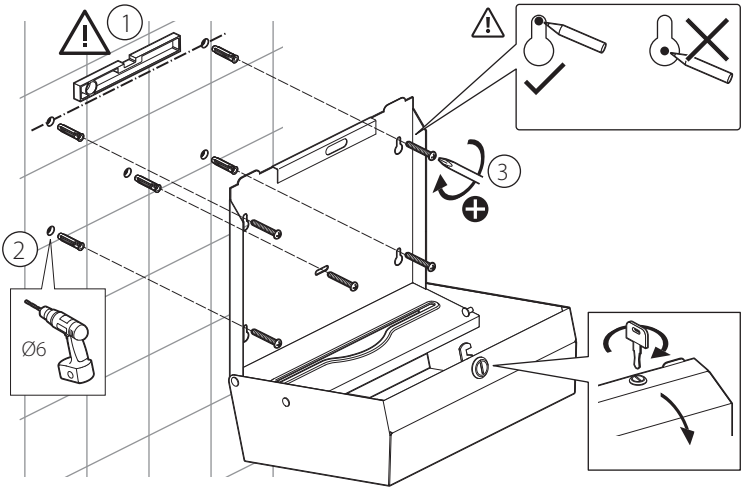

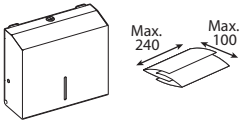

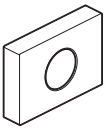

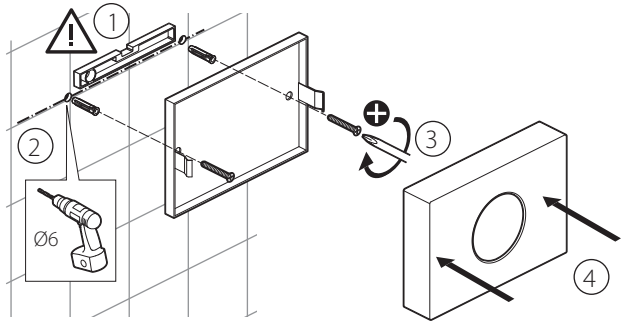

MI_DailyAcessR1

Sanitana

SANITANA SA
Av. Alto das Domingas, 41
Zona industrial Almas das Domingas
3780-244 Aguim, Anadia

Tel: +351 231 519 515
Fax: +351 231 519 504
info@sanitana.com
www.sanitana.pt