Sanitana

1

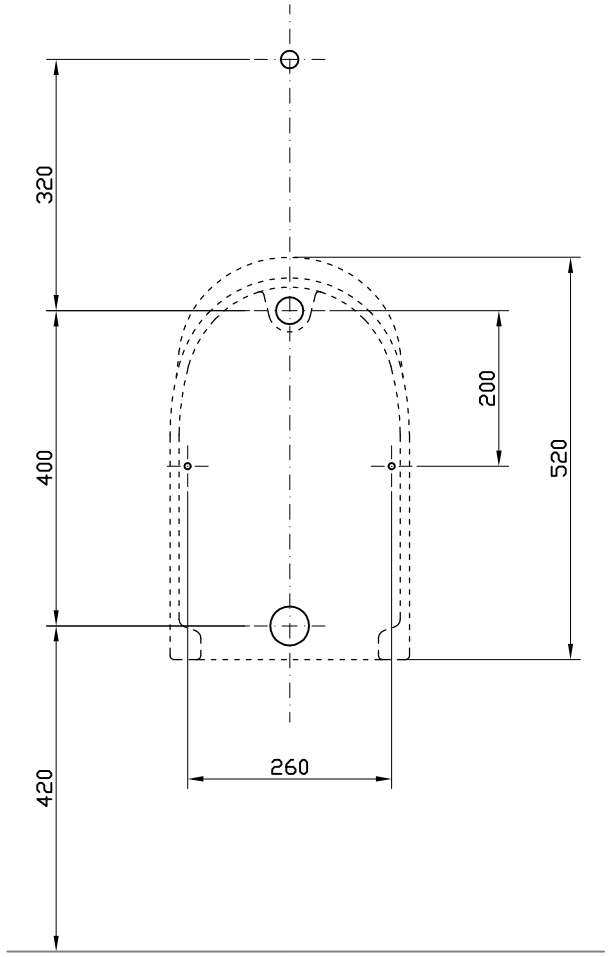

2

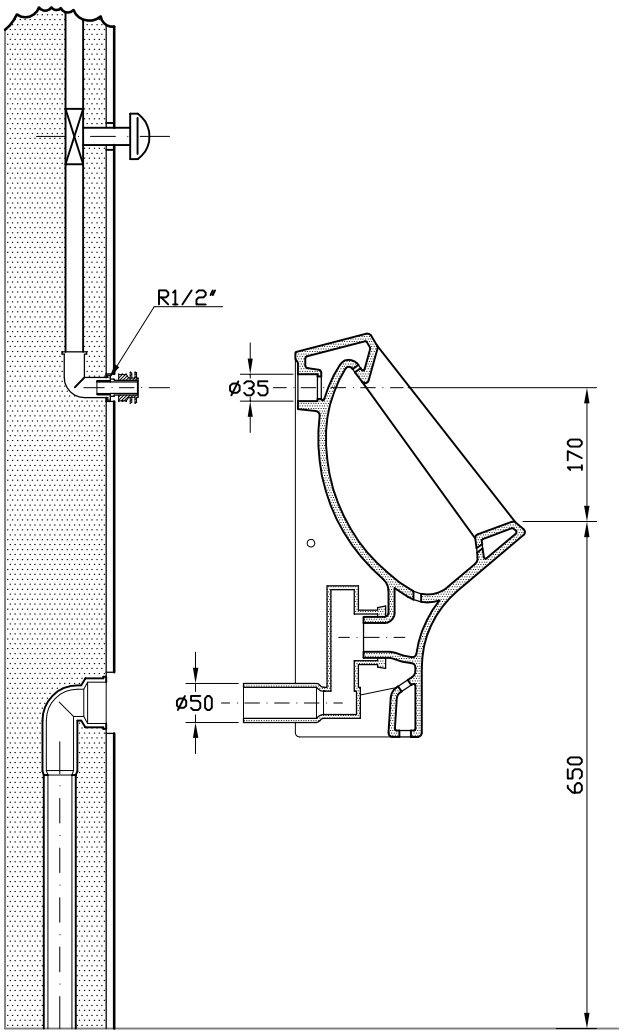

3

- E55137000

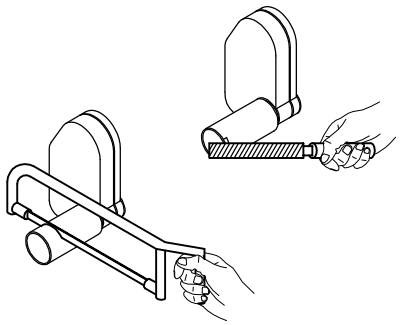

4

- E55135000

- E55136000

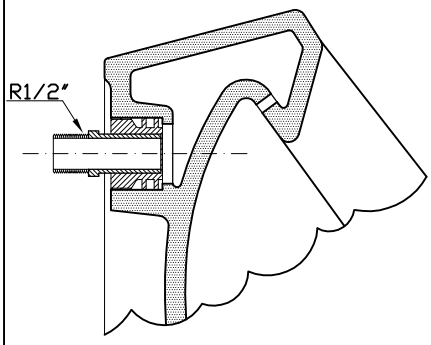

5

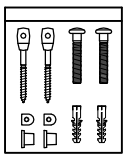

- CPF 10.0001

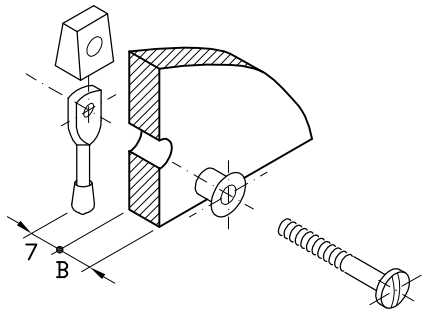

SCDRW–000086071