

FUTURA

BTW close-coupled rimless smart toilet with dual outlet

DIMENSIONS

Length	685 mm
Width	380 mm
Height	405 mm

COLOURS AND FINISHES

000 White

FEATURES

In vitreous-china, floor-standing, close-coupled (back to wall). Dual outlet. Rimless (without toilet seat) hygienic and easier to clean. Ceramic cistern with dual flush (3/4,5l) and soft-close seat & cover with take-off system (included). Compatible with standard power supply. Single water inlet (concealed connections). With remote control support. In the packaging: toilet, cistern, remote control and pre-installation kit.

TECHNICAL DRAWINGS

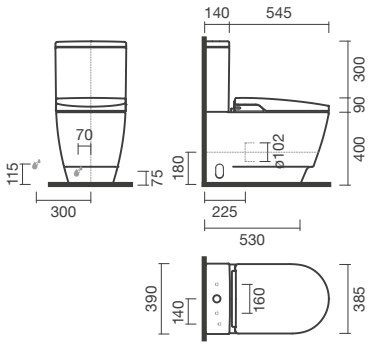

© Copyright 2026, Sanitana S.A - All rights reserved | 24-11-2026 | http://www.sanitana.com/products/btw-close-coupled-rimless-smart-toilet-dual-outlet-S002124000###00?sku=S00212400000000

Length: 685 mm

Width: 380 mm

Height: 405 mm

Air dryer temperature levels: 50º, 60º

Air temperature control

Anal cleaning

Cleaning function

Control panel: Remote control

Courtesy light

Drying function

Energy saving mode

Fixing kit: Included

Hot water cleaning

Nozzle position adjustment

Nozzle positions: 5

Number of nozzles: 1

Oscillating cleaning

Perineal cleaning

Personalised programmes

Power Supply (Hz): 50

Power Supply (V): 220

Power Wattage (Watts): 220

Remote control wall suppport included

Removable nozzle

Removable seat and cover

Self-cleaning nozzle

Shape: Round

Smart Toilet type: In-Wash ®

SoftClose system

User detection

Water inlet position: Bottom inlet

Water intensity control

Water pressure (Mpa): 0.05 - 0.9

Water temperature control

Weight (Kg): 55

© Copyright 2026, Sanitana S.A - All rights reserved | 24-11-2026 | http://www.sanitana.com/products/btw-close-coupled-rimless-smart-toilet-dual-outlet-S002124000###00?sku=S00212400000000









© Copyright 2026, Sanitana S.A - All rights reserved | 24-11-2026 | http://www.sanitana.com/products/btw-close-coupled-rimless-smart-toilet-dual-outlet-S002124000###00?sku=S00212400000000

FUTURA



Futura is our smart toilet, designed to bring the future of personal hygiene into your home. With personalized washing modes, adjustable water temperature, a heated seat, and gentle drying, Futura offers a refreshing, natural and comfortable way to care for yourself.

INSTALLATION AND USER MANUALS

Installation Handbook

Installation Handbook

Product Technical Fact Sheet - Documents

© Copyright 2026, Sanitana S.A - All rights reserved | 24-11-2026 | http://www.sanitana.com/products/btw-close-coupled-rimless-smart-toilet-dual-outlet-S002124000###00?sku=S00212400000000