

CORAL

# Close-coupled BTW Rimless toilet with dual outlet

DIMENSIONS

| | |
|---|---|
| Length | 620 mm |
| Width | 368 mm |
| Height | 400 mm |

COLOURS AND FINISHES

000 White

## FEATURES

Made of ceramic, floor-standing (close-coupled, compact and back to wall). Dual outlet. Rimless, hygienic and easier to clean. Compatible with Coral ceramic cistern with dual flush (3/4,5l) and Coral seats and covers. In the packaging: toilet, bend connector and fixing kit.

**Length:** 620 mm

**Width:** 368 mm

**Height:** 400 mm

Back to wall

**Commodity Code/Import Code Number for Foreign Trad:** 69101000

Elbow included

**Fixing kit:** Included

**Installation type:** Floorstanding

**Net weight (kg):** 32.7

**Outlet type:** Dual (vario)

**Rim type:** Rimless

**Shape:** Soft

## TECHNICAL DRAWINGS

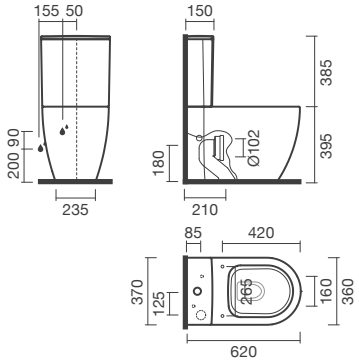


© Copyright 2026, Sanitana S.A - All rights reserved | 24-11-2026 | http://www.sanitana.com/products/close-coupled-btw-rimless-toilet-dual-outlet-S100638817###00?sku=S10063881700000









© Copyright 2026, Sanitana S.A - All rights reserved | 24-11-2026 | http://www.sanitana.com/products/close-coupled-btw-rimless-toilet-dual-outlet-S100638817###00?sku=S10063881700000

# CORAL



Coral is a sanitaryware collection of curved forms with a modern and elegant design. The balance between aesthetics and functionality gives rise to a range of toilets, bidets, and urinals, uniting style, function, and technologies that facilitate cleaning and water saving.

## INSTALLATION AND USER MANUALS

Installation Handbook

Product Technical Fact Sheet - Documents

© Copyright 2026, Sanitana S.A - All rights reserved | 24-11-2026 | http://www.sanitana.com/products/close-coupled-btw-rimless-toilet-dual-outlet-S100638817###00?sku=S10063881700000