

CORAL

BTW toilet cistern with 3/4,5 liters flushing mechanism

DIMENSIONS

Length	150 mm
Width	375 mm
Height	380 mm

COLOURS AND FINISHES

000 White

TECHNICAL DRAWINGS

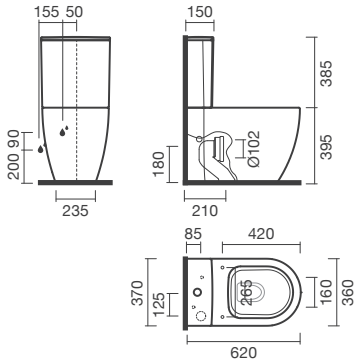

FEATURES

Made of ceramic, for installation with Coral BTW toilet (back to wall). Bottom inlet, vertical outlet. Dual flush (3/4,5l). In the packaging: cistern and flush mechanism.

Length: 150 mm

Width: 375 mm

Height: 380 mm

Commodity Code/Import Code Number for Foreign Trad: 69101000

Fixing kit: Included

Flushing type: Dual flush 3/4.5 litres

Net weight (kg): 12.5

Water inlet position: Side left

© Copyright 2026, Sanitana S.A - All rights reserved | 24-11-2026 | http://www.sanitana.com/products/btw-toilet-cistern-34-5liters-flushing-mechanism-S100640666###01?sku=S10064066600001









© Copyright 2026, Sanitana S.A - All rights reserved | 24-11-2026 | http://www.sanitana.com/products/btw-toilet-cistern-34-5liters-flushing-mechanism-S100640666###01?sku=S10064066600001

CORAL



Coral is a sanitaryware collection of curved forms with a modern and elegant design. The balance between aesthetics and functionality gives rise to a range of toilets, bidets, and urinals, uniting style, function, and technologies that facilitate cleaning and water saving.

INSTALLATION AND USER MANUALS

Installation Handbook

Product Technical Fact Sheet - Documents

© Copyright 2026, Sanitana S.A - All rights reserved | 24-11-2026 | http://www.sanitana.com/products/btw-toilet-cistern-34-5liters-flushing-mechanism-S100640666###01?sku=S10064066600001