

GLAM

BTW toilet cistern with 3/4,5 liters flushing mechanism

DIMENSIONS

Length	305 mm
Width	150 mm
Height	380 mm

COLOURS AND FINISHES

000 White

TECHNICAL DRAWINGS

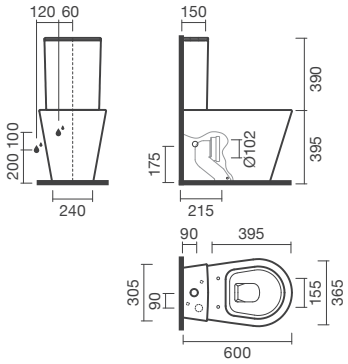

FEATURES

Made of ceramic, for installation with Glam BTW toilet (back to wall). Bottom inlet, vertical outlet. Dual flush (3/4,5l). In the packaging: cistern and flush mechanism.

Length: 305 mm

Width: 150 mm

Height: 380 mm

Fixing kit: Included

Flushing type: Dual flush 3/4.5 litres

Water inlet position: Side left

© Copyright 2026, Sanitana S.A - All rights reserved | 24-11-2026 | http://www.sanitana.com/products/btw-toilet-cistern-34-5liters-flushing-mechanism-S100695666###00?sku=S10069566600000







© Copyright 2026, Sanitana S.A - All rights reserved | 24-11-2026 | http://www.sanitana.com/products/btw-toilet-cistern-34-5liters-flushing-mechanism-S100695666###00?sku=S10069566600000

GLAM



Glam is an elegant and modern sanitaryware collection that combines distinctive design with functionality. With toilets and bidets featuring both curved and straight lines, it offers water-saving technology and removable seats for greater comfort, hygiene, and practicality.

INSTALLATION AND USER MANUALS

Installation Handbook

Product Technical Fact Sheet - Documents

© Copyright 2026, Sanitana S.A - All rights reserved | 24-11-2026 | http://www.sanitana.com/products/btw-toilet-cistern-34-5liters-flushing-mechanism-S100695666###00?sku=S10069566600000