

NEXO

Wall-mounted bidet - 530m

DIMENSIONS

Length	525 mm
Width	360 mm
Height	335 mm

COLOURS AND FINISHES

000 White

TECHNICAL DRAWINGS

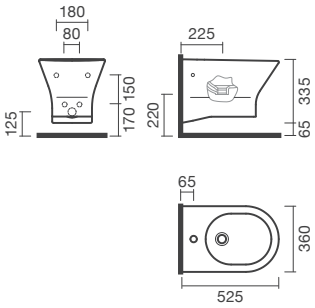

FEATURES

Made of ceramic, wall-mounted. With tap hole, with overflow. In the packaging: bidet and pre-installation kit.

Length: 525 mm

Width: 360 mm

Height: 335 mm

Fixing kit: Included

Installation type: Wall-hung

Shape: Round

Taphole configuration: 1 Taphole

© Copyright 2026, Sanitana S.A - All rights reserved | 24-11-2026 | http://www.sanitana.com/products/wall-mounted-bidet-530m-S100743349###00?sku=S10074334900000





NEXO



With a geometric and contemporary design, Loft offers floor-standing or wall-mounted basins, toilets, and bidets, combining functionality, aesthetics, and affordable prices – the ideal choice to create a modern, practical, and economical bathroom.

INSTALLATION AND USER MANUALS

Installation Handbook

Product Technical Fact Sheet - Documents

© Copyright 2026, Sanitana S.A - All rights reserved | 24-11-2026 | http://www.sanitana.com/products/wall-mounted-bidet-530m-S100743349###00?sku=S10074334900000