

POP ART

BTW toilet cistern with 3/4,5 liters flushing mechanism

DIMENSIONS

Length	335 mm
Width	145 mm
Height	385 mm

COLOURS AND FINISHES

000 White

TECHNICAL DRAWINGS

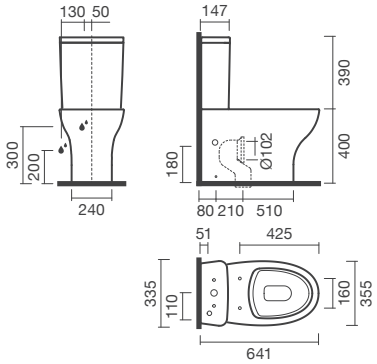

FEATURES

Made of ceramic, for installation with Pop Art BTW toilet (back to wall). Bottom inlet, vertical outlet. Dual flush (3/4,5l). In the packaging: cistern and flush mechanism.

Length: 335 mm

Width: 145 mm

Height: 385 mm

Commodity Code/Import Code Number for Foreign Trad: 69101000

Fixing kit: Included

Flushing type: Dual flush 3/4.5 litres

Net weight (kg): 11

Water inlet position: Bottom left

© Copyright 2026, Sanitana S.A - All rights reserved | 24-11-2026 | http://www.sanitana.com/products/btw-toilet-cistern-34-5liters-flushing-mechanism-S102007045###00?sku=S10200704500000







© Copyright 2026, Sanitana S.A - All rights reserved | 24-11-2026 | http://www.sanitana.com/products/btw-toilet-cistern-34-5liters-flushing-mechanism-S102007045###00?sku=S10200704500000

POP ART



Pop Art is a versatile and affordable collection combining simple, modern lines with functional design. With floor-mounted and wall-hung toilets, bidets, and basins, it offers efficient solutions with water-saving technology and easy maintenance.

INSTALLATION AND USER MANUALS

Installation Handbook

Product Technical Fact Sheet - Documents

© Copyright 2026, Sanitana S.A - All rights reserved | 24-11-2026 | http://www.sanitana.com/products/btw-toilet-cistern-34-5liters-flushing-mechanism-S102007045###00?sku=S10200704500000