

NEXO

BTW toilet cistern with 3/4,5 liters flushing mechanism

DIMENSIONS

Length	385 mm
Width	140 mm
Height	360 mm

COLOURS AND FINISHES

000 White

FEATURES

Made of ceramic, for installation with Nexo BTW toilet (back to wall). Bottom inlet, vertical outlet. Dual flush (3/4,5l). In the packaging: cistern and flush mechanism.

Length: 385 mm

Width: 140 mm

Height: 360 mm

Fixing kit: Included

Flushing type: Dual flush 3/4.5 litres

Water inlet position: Bottom left

TECHNICAL DRAWINGS

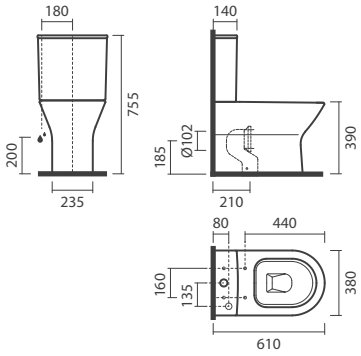

© Copyright 2026, Sanitana S.A - All rights reserved | 24-11-2026 | http://www.sanitana.com/products/btw-toilet-cistern-34-5liters-flushing-mechanism-S102015045###00?sku=S10201504500000









© Copyright 2026, Sanitana S.A - All rights reserved | 24-11-2026 | http://www.sanitana.com/products/btw-toilet-cistern-34-5liters-flushing-mechanism-S102015045###00?sku=S10201504500000

NEXO



With a geometric and contemporary design, Loft offers floor-standing or wall-mounted basins, toilets, and bidets, combining functionality, aesthetics, and affordable prices – the ideal choice to create a modern, practical, and economical bathroom.

INSTALLATION AND USER MANUALS

Installation Handbook

Product Technical Fact Sheet - Documents

© Copyright 2026, Sanitana S.A - All rights reserved | 24-11-2026 | http://www.sanitana.com/products/btw-toilet-cistern-34-5liters-flushing-mechanism-S102015045###00?sku=S10201504500000