

NEXO

Toilet cistern with 3/6 liters flushing mechanism

DIMENSIONS

Length	380 mm
Width	175 mm
Height	365 mm

COLOURS AND FINISHES

000 White

FEATURES

Made of ceramic, for installation with Nexo close-coupled toilet. Bottom inlet, vertical outlet. Dual flush (3/6l). In the packaging: cistern and flush mechanism.

Length: 380 mm

Width: 175 mm

Height: 365 mm

Fixing kit: Included

Flushing type: Dual flush 3/6 litres

Water inlet position: Bottom left

TECHNICAL DRAWINGS

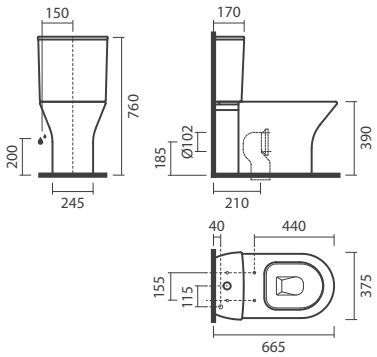

© Copyright 2026, Sanitana S.A - All rights reserved | 24-11-2026 | http://www.sanitana.com/products/toilet-cistern-36liters-flushing-mechanism-S102017045###00?sku=S10201704500000









© Copyright 2026, Sanitana S.A - All rights reserved | 24-11-2026 | http://www.sanitana.com/products/toilet-cistern-36liters-flushing-mechanism-S102017045###00?sku=S10201704500000

NEXO



With a geometric and contemporary design, Loft offers floor-standing or wall-mounted basins, toilets, and bidets, combining functionality, aesthetics, and affordable prices – the ideal choice to create a modern, practical, and economical bathroom.

INSTALLATION AND USER MANUALS

Installation Handbook

Product Technical Fact Sheet - Documents

© Copyright 2026, Sanitana S.A - All rights reserved | 24-11-2026 | http://www.sanitana.com/products/toilet-cistern-36liters-flushing-mechanism-S102017045###00?sku=S10201704500000