

LOFT

Toilet cistern with 3/4,5 liters flushing mechanism

DIMENSIONS

Length	355 mm
Width	155 mm
Height	385 mm

COLOURS AND FINISHES

000 White

FEATURES

Made of ceramic, for installation with Loft close-coupled toilet. Side inlet, vertical outlet. Dual flush (3/4,5l). In the packaging: cistern and flush mechanism.

Length: 355 mm

Width: 155 mm

Height: 385 mm

Fixing kit: Included

Flushing type: Dual flush 3/4.5 litres

Water inlet position: Side left

TECHNICAL DRAWINGS

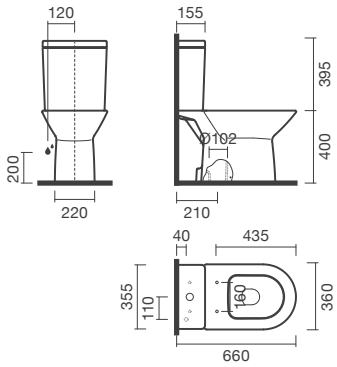

© Copyright 2026, Sanitana S.A - All rights reserved | 24-11-2026 | http://www.sanitana.com/products/toilet-cistern-34-5liters-flushing-mechanism-S102055047###01?sku=S10205504700001









© Copyright 2026, Sanitana S.A - All rights reserved | 24-11-2026 | http://www.sanitana.com/products/toilet-cistern-34-5liters-flushing-mechanism-S102055047###01?sku=S10205504700001

LOFT



With a simple, rounded, and functional design, Cent is the ideal choice for those seeking practicality. Featuring wall-mounted basins, toilets, and versatile bidets, it easily adapts to any bathroom style, blending aesthetics and utility.

INSTALLATION AND USER MANUALS

Product Technical Fact Sheet - Documents

© Copyright 2026, Sanitana S.A - All rights reserved | 24-11-2026 | http://www.sanitana.com/products/toilet-cistern-34-5liters-flushing-mechanism-S102055047###01?sku=S10205504700001