

CENT

Toilet cistern with 3/6 liters flushing mechanism

DIMENSIONS

Length	365 mm
Width	160 mm
Height	357 mm

COLOURS AND FINISHES

000 White

TECHNICAL DRAWINGS

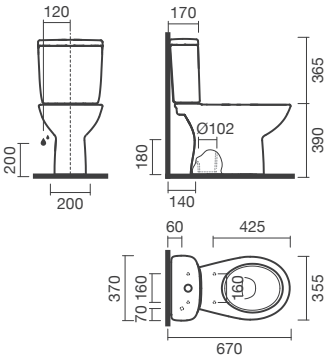

FEATURES

Made of ceramic, for installation with Cent close-coupled toilet. Side inlet, vertical outlet. Dual flush (3/6l). In the packaging: cistern and flush mechanism.

Length: 365 mm

Width: 160 mm

Height: 357 mm

Fixing kit: Included

Flushing type: Dual flush 3/6 litres

Water inlet position: Side left

© Copyright 2026, Sanitana S.A - All rights reserved | 24-11-2026 | http://www.sanitana.com/products/toilet-cistern-36liters-flushing-mechanism-S102065047###00?sku=S10206504700000

CENT



With a simple, rounded and functional design, CENT is the ideal choice for those seeking everyday practicality. The collection includes Rimless toilets, bidets and wall-hung basins, distinguished by their timeless design and multiple installation options that allow easy adaptation to any bathroom.

INSTALLATION AND USER MANUALS

Product Technical Fact Sheet - Documents

© Copyright 2026, Sanitana S.A - All rights reserved | 24-11-2026 | http://www.sanitana.com/products/toilet-cistern-36liters-flushing-mechanism-S102065047###00?sku=S10206504700000