

CENT

Wall-mounted ceramic washbasin - 550mm

DIMENSIONS

Length	550 mm
Width	450 mm
Height	200 mm

COLOURS AND FINISHES

000 White

TECHNICAL DRAWINGS

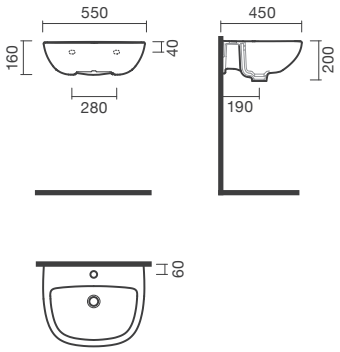

FEATURES

Made of ceramic, wall-mounted. With tap hole, with overflow. Compatible with Cent siphon cover and pedestal. In the packaging: washbasin and fixing kit.

Length: 550 mm

Width: 450 mm

Height: 200 mm

Bottom side glazed

Bowl position: Central

Fixing kit: Included

Installation type: Wall-hung

Material: Vitreous china

Taphole configuration: 1 Taphole, 1 Taphole

© Copyright 2026, Sanitana S.A - All rights reserved | 24-11-2026 | http://www.sanitana.com/products/wall-mounted-ceramic-washbasin-550mm-S102066172###00?sku=S10206617200000







© Copyright 2026, Sanitana S.A - All rights reserved | 24-11-2026 | http://www.sanitana.com/products/wall-mounted-ceramic-washbasin-550mm-S102066172###00?sku=S10206617200000

CENT



With a simple, rounded and functional design, CENT is the ideal choice for those seeking everyday practicality. The collection includes Rimless toilets, bidets and wall-hung basins, distinguished by their timeless design and multiple installation options that allow easy adaptation to any bathroom.

INSTALLATION AND USER MANUALS

Installation Handbook

Product Technical Fact Sheet - Documents

© Copyright 2026, Sanitana S.A - All rights reserved | 24-11-2026 | http://www.sanitana.com/products/wall-mounted-ceramic-washbasin-550mm-S102066172###00?sku=S10206617200000