

MOBIL

Toilet cistern with 3/4,5 liters flushing mechanism

DIMENSIONS

Length	175 mm
Width	425 mm
Height	390 mm

COLOURS AND FINISHES

000 White

FEATURES

Made of ceramic, for installation with Mobil close-coupled toilet. Bottom inlet, vertical outlet. Dual flush (3/4,5l). In the packaging: cistern and flush mechanism.

Length: 175 mm

Width: 425 mm

Height: 390 mm

TECHNICAL DRAWINGS

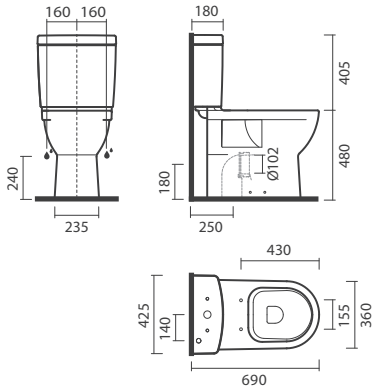

© Copyright 2026, Sanitana S.A - All rights reserved | 24-11-2026 | http://www.sanitana.com/products/toilet-cistern-34-5liters-flushing-mechanism-S102176045###00?sku=S10217604500000







MOBIL

Mobil is a practical and specialized sanitaryware and accessories collection designed for users with reduced mobility. With functional, ergonomic, and durable design, it offers comfort, accessibility, and safety for greater independence daily.

© Copyright 2026, Sanitana S.A - All rights reserved | 24-11-2026 | http://www.sanitana.com/products/toilet-cistern-34-5liters-flushing-mechanism-S102176045###00?sku=S10217604500000

INSTALLATION AND USER MANUALS

Product Technical Fact Sheet - Documents

© Copyright 2026, Sanitana S.A - All rights reserved | 24-11-2026 | http://www.sanitana.com/products/toilet-cistern-34-5liters-flushing-mechanism-S102176045###00?sku=S10217604500000