

MOBIL

Close-coupled toilet with horizontal outlet - hospital type model

DIMENSIONS

Length	435 mm
Width	500 mm
Height	460 mm

COLOURS AND FINISHES

000 White

TECHNICAL DRAWINGS

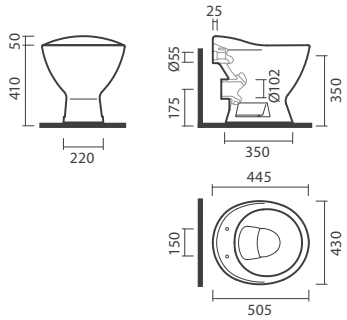

FEATURES

Made of ceramic, floor-mounted design (close-coupled and compact). Horizontal outlet. Compatible with plastic cisterns or flowmeters. In the packaging: hospital toilet, plastic grid, and fixing kit.

Length: 435 mm

Width: 500 mm

Height: 460 mm

© Copyright 2026, Sanitana S.A - All rights reserved | 24-11-2026 | http://www.sanitana.com/products/close-coupled-toilet-horizontal-outlet-hospital-type-model-S102176178###00?sku=S10217617800000

MOBIL

Mobil is a practical and specialized sanitaryware and accessories collection designed for users with reduced mobility. With functional, ergonomic, and durable design, it offers comfort, accessibility, and safety for greater independence daily.

INSTALLATION AND USER MANUALS

Product Technical Fact Sheet - Documents

© Copyright 2026, Sanitana S.A - All rights reserved | 24-11-2026 | http://www.sanitana.com/products/close-coupled-toilet-horizontal-outlet-hospital-type-model-S102176178###00?sku=S10217617800000