

CAPRI

Horizontal inlet urinal

DIMENSIONS

Length	305 mm
Width	340 mm
Height	535 mm

COLOURS AND FINISHES

000 White

FEATURES

Made of ceramic, wall-mounted. Horizontal inlet and outlet. In the packaging: urinal, connections, bottle trap and fixing kit.

Length: 305 mm

Width: 340 mm

Height: 535 mm

TECHNICAL DRAWINGS

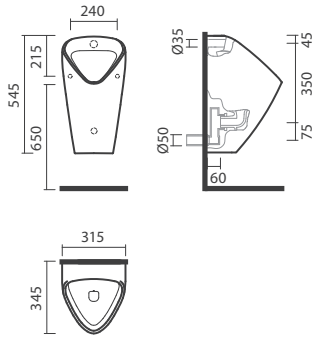

© Copyright 2026, Sanitana S.A - All rights reserved | 24-11-2026 | http://www.sanitana.com/products/horizontal-inlet-urinal-S102179000###00?sku=S10217900000000





CAPRI

Capri is one of Sanitana's more classic ceramic urinals, available in both standard and electronic versions. The electronic model provides enhance hygiene, as fushing is sensor-activeted, eliminating the need to for physical cotact.

INSTALLATION AND USER MANUALS

Installation Handbook

© Copyright 2026, Sanitana S.A - All rights reserved | 24-11-2026 | http://www.sanitana.com/products/horizontal-inlet-urinal-S102179000###00?sku=S10217900000000