

NEXO ROUND

BTW Rimless toilet with dual outlet

TECHNICAL DRAWINGS

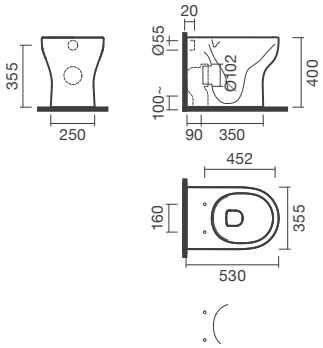

FEATURES

Made of ceramic, floor-standing (simple and back to wall). Dual outlet. Rimless toilet, hygienic, and easy to clean. Compatible with plastic cistern or flowmeters and Nexo Round seats and covers. In the packaging: toilet, bend connector and fixing kit.

Length: 530 mm

Width: 355 mm

Height: 400 mm

© Copyright 2026, Sanitana S.A - All rights reserved | 24-11-2026 | http://www.sanitana.com/products/btw-rimless-toilet-dual-outlet-S102200503###00?sku=S10220050300000





NEXO ROUND



Redefine the bathroom essentials. A sanitaryware collection that brings together harmonious design, soft curves and smart functionality to create modern, inviting and accessible spaces. The ideal choice for those who value simplicity, comfort and timeless elegance in everyday life.

© Copyright 2026, Sanitana S.A - All rights reserved | 24-11-2026 | http://www.sanitana.com/products/btw-rimless-toilet-dual-outlet-S102200503###00?sku=S10220050300000