

CAROLINA

Acrylic rectangular bathtub

DIMENSIONS

Length	1700 mm
Width	800 mm
Height	462 mm

COLOURS AND FINISHES

000 White

TECHNICAL DRAWINGS

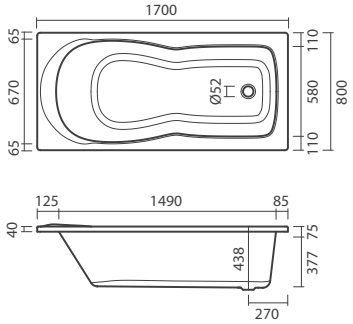

FEATURES

Made of acrylic. Rectangular - 1700 x 800mm - with smooth surface. Without whirpool system. Free-standing (against at least 2 walls) or recessed. Requires Ø55mm waste, feet or support structure for installation. Compatible with acrylic panels. Capacity: 221 liters. In the packaging: bathtub.

Length: 1700 mm

Width: 800 mm

Height: 462 mm

Bath height with mounted panel (mm): 560

Inside height (mm): 430

Inside length (mm): 1490

Inside width (mm): 670

Installation legs: Optional legs

Material: Acrylic

People capacity: 1

Shape: Rectangular

Water capacity to overflow (l): 221

© Copyright 2026, Sanitana S.A - All rights reserved | 24-11-2026 | http://www.sanitana.com/products/acrylic-rectangular-bathtub-S200229000###00?sku=S20022900000000







© Copyright 2026, Sanitana S.A - All rights reserved | 24-11-2026 | http://www.sanitana.com/products/acrylic-rectangular-bathtub-S200229000###00?sku=S20022900000000

CAROLINA



Carolina stands out for is highly ergonomic inner surface, which naturally adapts to the body. Availabe in 80 x 80cm, it features both simple and whirlpool versions and is compatible with standard acrylic aprons, that discreetly hide both the structure and connections.

INSTALLATION AND USER MANUALS

Installation Handbook

Product Technical Fact Sheet - Documents

© Copyright 2026, Sanitana S.A - All rights reserved | 24-11-2026 | http://www.sanitana.com/products/acrylic-rectangular-bathtub-S200229000###00?sku=S20022900000000