

ROSARIO

Acrylic rectangular bathtub

DIMENSIONS

Length	1800 mm
Width	800 mm
Height	450 mm

COLOURS AND FINISHES

000 White

TECHNICAL DRAWINGS

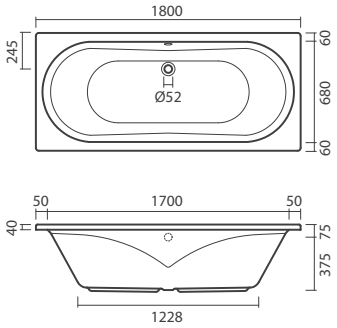

FEATURES

Made of acrylic. Rectagular - 1800 x 800mm - with smooth surface. Without whirpool system. Free-standing (against at least 2 walls) or recessed. Requires Ø55mm waste, feet or support structure and panels (optional) to be installed. Compatible with acrylic panels. Capacity: 232 liters. In the packaging: bathtub.

Length: 1800 mm

Width: 800 mm

Height: 450 mm

© Copyright 2026, Sanitana S.A - All rights reserved | 24-11-2026 | http://www.sanitana.com/products/acrylic-rectangular-bathtub-S200416000###00?sku=S20041600000000







© Copyright 2026, Sanitana S.A - All rights reserved | 24-11-2026 | http://www.sanitana.com/products/acrylic-rectangular-bathtub-S200416000###00?sku=S20041600000000

ROSARIO



Rosario stands out with its ergonomic, confortable inner surface, that adapts naturally to the body. Availabe in 180 x 80cm, it features both simple and whirlpool versions, and is compatible with standard acrylic aprons, that discreetly cover the structure and connections.

INSTALLATION AND USER MANUALS

Installation Handbook

Product Technical Fact Sheet - Documents

© Copyright 2026, Sanitana S.A - All rights reserved | 24-11-2026 | http://www.sanitana.com/products/acrylic-rectangular-bathtub-S200416000###00?sku=S20041600000000