

ZAHA

Acrylic oval free-standing bathtub

DIMENSIONS

Length	1700 mm
Width	750 mm
Height	740 mm

COLOURS AND FINISHES

000 White

FEATURES

Made of acrylic. Oval - 1700 x 750mm - with smooth surface. Without whirpool system. Free-standing (stand-alone). Pre-installation of water point required. Ø55mm waste. Capacity: 213 liters. In the packaging: bathtub and waste.

Length: 1700 mm

Width: 750 mm

Height: 740 mm

Bath height with mounted panel (mm): 560

Inside height (mm): 420

Inside length (mm): 1595

Inside width (mm): 740

Installation legs: Optional legs

Installation structure: With frame (fitted)

Installation type: Freestanding

Material: Acrylic

People capacity: 1

Shape: Rectangular

Water capacity to overflow (l): 213

TECHNICAL DRAWINGS

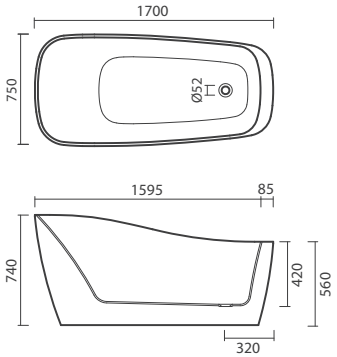

© Copyright 2026, Sanitana S.A - All rights reserved | 24-11-2026 | http://www.sanitana.com/products/acrylic-oval-free-standing-bathtub-S20201800000000?sku=S20201800000000









© Copyright 2026, Sanitana S.A - All rights reserved | 24-11-2026 | http://www.sanitana.com/products/acrylic-oval-free-standing-bathtub-S20201800000000?sku=S20201800000000







ZAHA



Zaha is a freestanding acrylic bathtub for those who want to make a bold design statment with your decor. An immersion bathtub available in 2 sizes - 180 x 80 and 170 x75cm with waste set included. There are no whirlpool versions available.

© Copyright 2026, Sanitana S.A - All rights reserved | 24-11-2026 | http://www.sanitana.com/products/acrylic-oval-free-standing-bathtub-S20201800000000?sku=S20201800000000

INSTALLATION AND USER MANUALS

Installation Handbook

Product Technical Fact Sheet - Documents

© Copyright 2026, Sanitana S.A - All rights reserved | 24-11-2026 | http://www.sanitana.com/products/acrylic-oval-free-standing-bathtub-S20201800000000?sku=S20201800000000