

VITA

# Anti-slip (stone) floorstanding / recessed acrylic shower tray

DIMENSIONS

| | |
|---|---|
| Length | 1200 mm |
| Width | 700 mm |
| Height | 40 mm |

COLOURS AND FINISHES

000 White

## TECHNICAL DRAWINGS

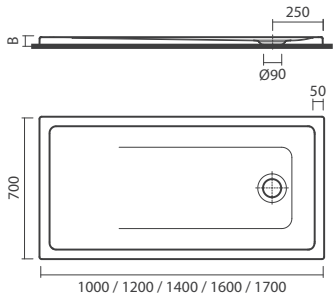


## FEATURES

Made of acrylic - 1200x700x40mm. Rectangular format, anti-slip surface (stone like). Floorstanding / recessed. Exterior profile height: 40mm. Uses Ø90mm outlet waste. In the packaging: shower tray.

**Length:** 1200 mm

**Width:** 700 mm

**Height:** 40 mm

**Depth:** Flat (between 45 and 65 mm)

**Drain diameter (mm):** 90

**Installation type:** Freestanding

**Material:** Acrylic

**Shape:** Rectangular

© Copyright 2026, Sanitana S.A - All rights reserved | 24-11-2026 | http://www.sanitana.com/products/anti-slip-stone-floorstanding-recessed-acrylic-shower-tray-S202105000###00?sku=S20210500000000









© Copyright 2026, Sanitana S.A - All rights reserved | 24-11-2026 | http://www.sanitana.com/products/anti-slip-stone-floorstanding-recessed-acrylic-shower-tray-S202105000###00?sku=S20210500000000





# VITA

With a fluid and elegant design, the Vita collection offers non-slip shower trays with sophisticated finishes and spacious bathtubs with or without hydromassage, combining comfort, versatility, and aesthetics to transform any bathroom.



**INSTALLATION AND USER MANUALS**

Installation Handbook

Product Technical Fact Sheet - Documents

© Copyright 2026, Sanitana S.A - All rights reserved | 24-11-2026 | http://www.sanitana.com/products/anti-slip-stone-floorstanding-recessed-acrylic-shower-tray-S202105000###00?sku=S20210500000000