

VITA

Anti-slip floorstanding / recessed acrylic shower tray

DIMENSIONS

Length	1400 mm
Width	700 mm
Height	40 mm

COLOURS AND FINISHES

000 White

TECHNICAL DRAWINGS

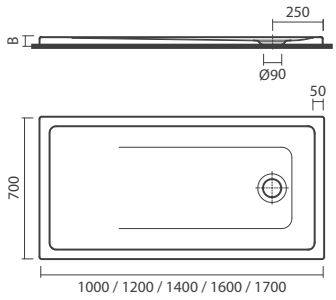

FEATURES

Made of acrylic - 1400x700x40mm. Rectangular format, anti-slip surface. Floorstanding / recessed. Exterior profile height: 40mm. Uses Ø90mm outlet waste. In the packaging: shower tray.

Length: 1400 mm

Width: 700 mm

Height: 40 mm

Depth: Flat (between 45 and 65 mm)

Drain diameter (mm): 90

Installation type: Freestanding

Material: Acrylic

Shape: Rectangular

© Copyright 2026, Sanitana S.A - All rights reserved | 24-11-2026 | http://www.sanitana.com/products/anti-slip-floorstanding-recessed-acrylic-shower-tray-S202106816###00?sku=S20210681600000

VITA



With a fluid and elegant design, the Vita collection offers non-slip shower trays with sophisticated finishes and spacious bathtubs with or without hydromassage, combining comfort, versatility, and aesthetics to transform any bathroom.

INSTALLATION AND USER MANUALS

Installation Handbook

Product Technical Fact Sheet - Documents

© Copyright 2026, Sanitana S.A - All rights reserved | 24-11-2026 | http://www.sanitana.com/products/anti-slip-floorstanding-recessed-acrylic-shower-tray-S202106816###00?sku=S20210681600000