

QUEEN

Enammeled steel oval bathtub

DIMENSIONS

Length	1800 mm
Width	800 mm
Height	555 mm

COLOURS AND FINISHES

000 White

TECHNICAL DRAWINGS

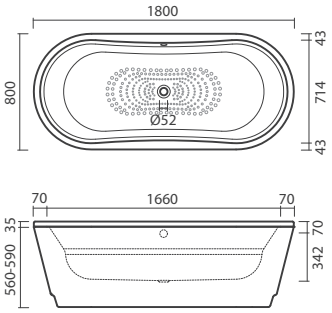

FEATURES

Made of enameled steel. Oval - 1800 x 800mm - with antislip surface. Without whirpool system. Free-standing (stand-alone). Requires a Ø55mm waste and threaded support feet for installation. Capacity: 230 liters. In the packaging: bathtub, soundproofing kit, stand-alone panel and waste.

Length: 1800 mm

Width: 800 mm

Height: 555 mm

Bath height with mounted panel (mm): 560

Earth connection

Inside height (mm): 405

Inside length (mm): 1660

Inside width (mm): 714

Installation legs: With legs

Installation structure: With frame and panel

Installation type: Freestanding

Material: Steel

Panel included

People capacity: 2

Shape: Oval

Sound insulation

Steel thickness: 3.5 mm

Water capacity to overflow (l): 230

© Copyright 2026, Sanitana S.A - All rights reserved | 24-11-2026 | http://www.sanitana.com/products/enammeled-steel-oval-bathtub-S300022121###00?sku=S30002212100000









© Copyright 2026, Sanitana S.A - All rights reserved | 24-11-2026 | http://www.sanitana.com/products/enammeled-steel-oval-bathtub-S300022121###00?sku=S30002212100000



QUEEN



Queen bathtubs is an enamelled steel bathtub that pay's tribute to the timeless elegance of classic cast iron tubs. With their majestic design, Queen bathtubs are sure to become the centerpiece of any luxurious bathroom, a truly fit for royalty.

INSTALLATION AND USER MANUALS

Installation Handbook

Product Technical Fact Sheet - Documents

© Copyright 2026, Sanitana S.A - All rights reserved | 24-11-2026 | http://www.sanitana.com/products/enammeled-steel-oval-bathtub-S300022121###00?sku=S30002212100000