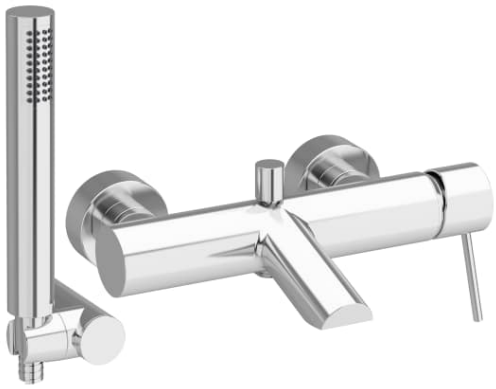

UNIC

Single lever bathtub mixer

DIMENSIONS

Length	260 mm
Width	175 mm
Height	60 mm

COLOURS AND FINISHES

126 Chrome

TECHNICAL DRAWINGS

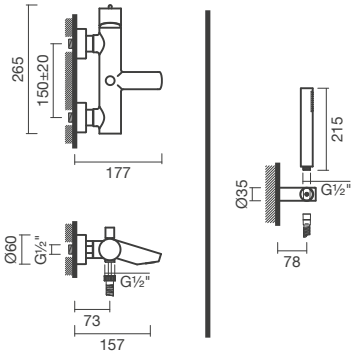

FEATURES

For wall-mounted installation (bathtubs). Ceramic disk cartridge and water-saving aerator. Single lever. In the packaging: faucet, handheld shower, support, 175cm flexible hose and fixing kit.

Length: 260 mm

Width: 175 mm

Height: 60 mm

Application place: Bathtub

Diverter: Manual

Excentrics included

Faucet type: Single-lever

Flexible supply hoses included

Flow rate (l/min - 3 bar): 12

Installation type: Wall-mounted

Type of cartridge: Single lever ceramic

Warranty Domestic Use: 5 years

Water connection thread: 1/2" - 1/2"

Water flow restrictor

© Copyright 2026, Sanitana S.A - All rights reserved | 24-11-2026 | http://www.sanitana.com/products/single-lever-bathtub-mixer-S500059138###05?sku=S50005913850705





UNIC



Unic is a collection combining minimalist and sophisticated design of faucets and shower columns, available in various finishes, uniting functionality, versatility, and a bold style to transform any bathroom.

INSTALLATION AND USER MANUALS

Installation Handbook

Product Technical Fact Sheet - Documents

© Copyright 2026, Sanitana S.A - All rights reserved | 24-11-2026 | http://www.sanitana.com/products/single-lever-bathtub-mixer-S500059138###05?sku=S50005913850705