

UNIC

Electronic washbasin mixer - recessed - dual water inlet

DIMENSIONS

Length	180 mm
Width	55 mm
Height	55 mm

COLOURS AND FINISHES

126 Chrome

TECHNICAL DRAWINGS

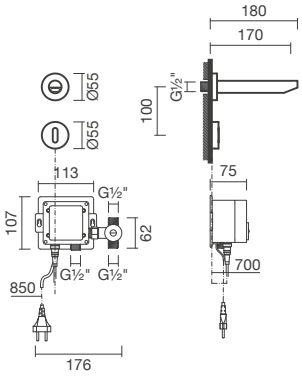

FEATURES

For installation on wall (washbasins without tap hole). Electro valve (electronic). Estimated water consumption: 1,7 l/min. Activated by infrared sensor. 2 water inlets. powered by electricity (230V) or batteries (1.5V). In the packaging: faucet, electronic control box, flexible connections and fixing kit.

Length: 180 mm

Width: 55 mm

Height: 55 mm

Aerator type: 2 jets

Application place: Basin

Check valve

Faucet type: Electronic technology

Finish: Chrome

Flexible supply hoses included

Flow rate (l/min - 3 bar): 1

Installation type: Built-in

Max continuous working temperature (°C): 65

Operating voltage (V): 230

Power supply: Bivolt or Battery

Temperature control: Cold or Pre-mixed water

Warranty Domestic Use: 5 years

Water connection thread: 1/2"

Water flow restrictor

© Copyright 2026, Sanitana S.A - All rights reserved | 24-11-2026 | http://www.sanitana.com/products/electronic-washbasin-mixer-recessed-dual-water-inlet-S500059294###07?sku=S50005929450707

UNIC



Unic is a collection combining minimalist and sophisticated design of faucets and shower columns, available in various finishes, uniting functionality, versatility, and a bold style to transform any bathroom.

INSTALLATION AND USER MANUALS

Installation Handbook

Product Technical Fact Sheet - Documents

© Copyright 2026, Sanitana S.A - All rights reserved | 24-11-2026 | http://www.sanitana.com/products/electronic-washbasin-mixer-recessed-dual-water-inlet-S500059294###07?sku=S50005929450707