

RAIN

Adjustable shower jet

DIMENSIONS

Length	90 mm
Width	50 mm
Height	50 mm

COLOURS AND FINISHES

126 Chrome

TECHNICAL DRAWINGS

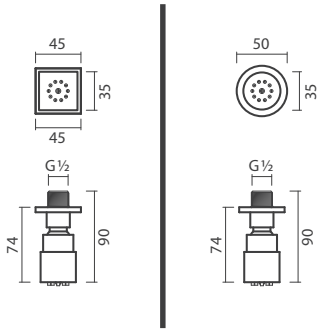

FEATURES

Made of brass. Wall-mounted. Round format. It is not advisable to use more than 4 injectors at the same time. In the packaging: shower jet.

Length: 90 mm

Width: 50 mm

Height: 50 mm

Adjustable

Easyclean ®

Function types: Rain

Installation type: Wall-mounted

Number of functions: 1

© Copyright 2026, Sanitana S.A - All rights reserved | 24-11-2026 | http://www.sanitana.com/products/adjustable-shower-jet-S500947410###00?sku=S50094741050700

RAIN



The Rain collection offers an extensive range of shower systems and components. Available in chrome and matte black, Rain include square and rectangular formats, with a cascade flow option fir overhead shower. Complete your shower space, matching it, for a cohesive and luxurious experience.

INSTALLATION AND USER MANUALS

Product Technical Fact Sheet - Documents

© Copyright 2026, Sanitana S.A - All rights reserved | 24-11-2026 | http://www.sanitana.com/products/adjustable-shower-jet-S500947410###00?sku=S50094741050700