

SUN

Single lever shower mixer

DIMENSIONS

Length	140 mm
Width	210 mm
Height	60 mm

COLOURS AND FINISHES

126 Chrome

TECHNICAL DRAWINGS

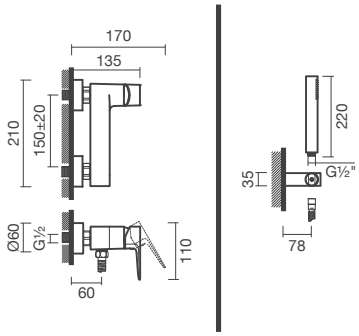

FEATURES

For wall-mounted installation (showers). Ceramic disk cartridge. Single lever. In the packaging: faucet, handheld shower, support, 170cm flexible hose and fixing kit.

Length: 140 mm

Width: 210 mm

Height: 60 mm

Application place: Shower

Excentrics included

Faucet type: Single-lever

Flexible supply hoses included

Flow rate (l/min - 3 bar): 6

Installation type: Wall-mounted

Type of cartridge: Single lever ceramic

Warranty Domestic Use: 5 years

Water connection thread: 1/2" - 1/2"

Water flow restrictor

© Copyright 2026, Sanitana S.A - All rights reserved | 24-11-2026 | http://www.sanitana.com/products/single-lever-shower-mixer-S502047662###00?sku=S50204766212600









© Copyright 2026, Sanitana S.A - All rights reserved | 24-11-2026 | http://www.sanitana.com/products/single-lever-shower-mixer-S502047662###00?sku=S50204766212600







© Copyright 2026, Sanitana S.A - All rights reserved | 24-11-2026 | http://www.sanitana.com/products/single-lever-shower-mixer-S502047662###00?sku=S50204766212600

SUN



Sun faucet collection seamlessly blends outstanding function with precision. Inspired by the latest trends, this modern range allows color-matching across your space with matt black, brushed and chrome finishes. The modern choice for trendy interiors.

INSTALLATION AND USER MANUALS

Installation Handbook

Product Technical Fact Sheet - Documents

© Copyright 2026, Sanitana S.A - All rights reserved | 24-11-2026 | http://www.sanitana.com/products/single-lever-shower-mixer-S502047662###00?sku=S50204766212600