

NORM

Single lever shower mixer

DIMENSIONS

Length	205 mm
Width	230 mm
Height	170 mm

COLOURS AND FINISHES

126 Chrome

FEATURES

For wall-mounted installation (showers). Ceramic disk cartridge. Single lever. Flow reductor integrated on flexible hose. Handheld shower with 3 funtions: massagen, rain and soft. In the packaging: faucet,handheld shower, support, 170cm flexible hose and fixing kit.

Length: 205 mm

Width: 230 mm

Height: 170 mm

Application place: Shower

Excentrics included

Faucet type: Single-lever

Flexible supply hoses included

Flow rate (l/min - 3 bar): 6

Installation type: Wall-mounted

Type of cartridge: Single lever ceramic

Warranty Domestic Use: 5 years

Water connection thread: 1/2" - 1/2"

Water flow restrictor

TECHNICAL DRAWINGS

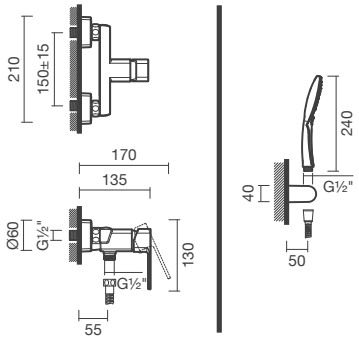

© Copyright 2026, Sanitana S.A - All rights reserved | 24-11-2026 | http://www.sanitana.com/products/single-lever-shower-mixer-S502095000###00?sku=S50209500012600





NORM



Add a distinctive touch to your bathroom with Norm, a collection featuring square and ultra-contemporary design in chromed brass. It includes faucets and a telescopic shower system with overhead and handheld showers, combining versatility, comfort, and style.

INSTALLATION AND USER MANUALS

Installation Handbook

Product Technical Fact Sheet - Documents

© Copyright 2026, Sanitana S.A - All rights reserved | 24-11-2026 | http://www.sanitana.com/products/single-lever-shower-mixer-S502095000###00?sku=S50209500012600