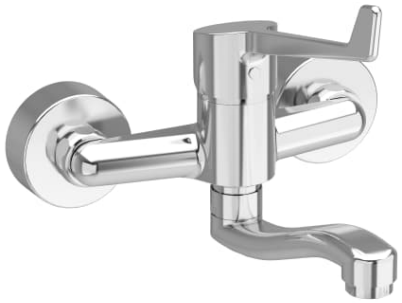

VIVA

Recessed single lever washbasin mixer - hospital type model

DIMENSIONS

Length	215 mm
Width	220 mm
Height	180 mm

COLOURS AND FINISHES

126 Chrome

TECHNICAL DRAWINGS

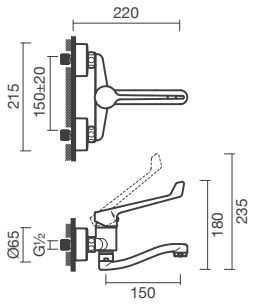

FEATURES

For recessed wall-mounted installation (hospital sinks and rectangular sinks, tanks or washbasins without a tap hole). Ceramic disk cartridge and water-saving aerator. Single lever (clinical handle). In the packaging: faucet.

Length: 215 mm

Width: 220 mm

Height: 180 mm

Application place: Basin

Faucet type: Single-lever

Flow rate (l/min - 3 bar): 5

Installation type: Wall-mounted

Type of cartridge: Single lever ceramic

Warranty Domestic Use: 5 years

Water connection thread: 1/2" - 1/2"

Water flow restrictor

© Copyright 2026, Sanitana S.A - All rights reserved | 24-11-2026 | http://www.sanitana.com/products/recessed-single-lever-washbasin-mixer-hospital-type-model-S502103358###00?sku=S50210335812600

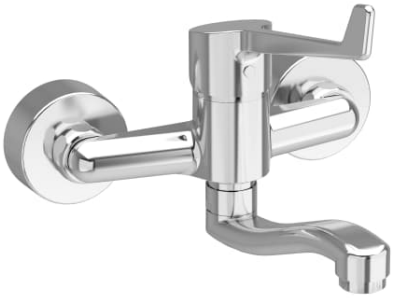



VIVA



The Viva collection offers a functional and timeless design, ideal for any bathroom style. With smooth lines and balanced forms, it includes a cold start functionality and features ceramic disc technology that ensures long-lasting performance. Available in various models, it's a practical and versatile choice for everyday use.

INSTALLATION AND USER MANUALS

Installation Handbook

Product Technical Fact Sheet - Documents

© Copyright 2026, Sanitana S.A - All rights reserved | 24-11-2026 | http://www.sanitana.com/products/recessed-single-lever-washbasin-mixer-hospital-type-model-S502103358###00?sku=S50210335812600