

BLOOM

Handheld shower for bidet/toilet + one water inlet 2 functions

DIMENSIONS

Length	250 mm
Width	80 mm
Height	120 mm

COLOURS AND FINISHES

126 Chrome

TECHNICAL DRAWINGS

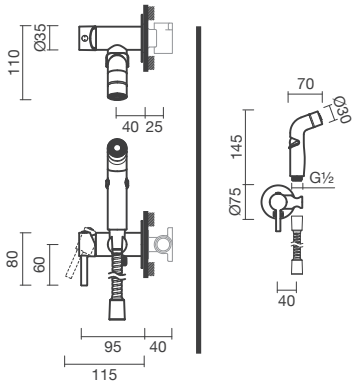

FEATURES

For wall-mounted installation (bidets / toilets). With 2 spray functions: rain or pulverization. Adjustable flow intensity. In the packaging: handheld shower, faucet, flexible connection and fixing kit.

Length: 250 mm

Width: 80 mm

Height: 120 mm

© Copyright 2026, Sanitana S.A - All rights reserved | 24-11-2026 | http://www.sanitana.com/products/handheld-shower-bidet-toilet-one-water-inlet-2functions-S502114000###01?sku=S50211400012601

BLOOM

Discover the timeless Bloom collection - a contemporary classic from Sanitana, with elegant contours available in chrome or matte black. Featuring water-saving technology and total comfort, it includes versatile and innovative faucets and shower systems.



© Copyright 2026, Sanitana S.A - All rights reserved | 24-11-2026 | http://www.sanitana.com/products/handheld-shower-bidet-toilet-one-water-inlet-2functions-S502114000###01?sku=S50211400012601