

DITTO

# Single lever shower mixer

DIMENSIONS

| | |
|---|---|
| Length | 181 mm |
| Width | 109 mm |
| Height | 119 mm |

COLOURS AND FINISHES

126 Chrome

## FEATURES

For wall-mounted installation (showers). Ceramic disk cartridge. Single lever. Flow reductor integrated on flexible hose. In the packaging: faucet, handheld shower, support, 170cm flexible hose and fixing kit.

**Length:** 181 mm

**Width:** 109 mm

**Height:** 119 mm

**Application place:** Shower

**Excentrics included**

**Faucet type:** Single-lever

**Flexible supply hoses included**

**Flow rate (l/min - 3 bar):** 6

**Installation type:** Wall-mounted

**Type of cartridge:** Single lever ceramic

**Warranty Domestic Use:** 5 years

**Water connection thread:** 1/2" - 1/2"

**Water flow restrictor**

## TECHNICAL DRAWINGS

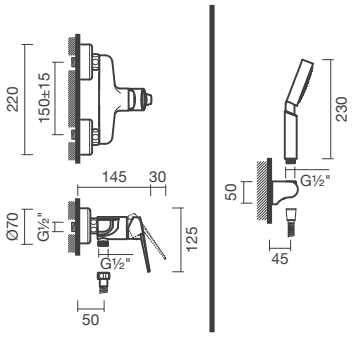


© Copyright 2026, Sanitana S.A - All rights reserved | 24-11-2026 | http://www.sanitana.com/products/single-lever-shower-mixer-S502118000###00?sku=S50211800012600





# DITTO



Ditto faucet collection offers a contemporary design with a slimline handle and a striking chrome finish. Available in 7 models, each faucet features ceramic cartridges and water and energy-saving technologies for ultimate efficiency.

**INSTALLATION AND USER MANUALS**

Installation Handbook

Product Technical Fact Sheet - Documents

© Copyright 2026, Sanitana S.A - All rights reserved | 24-11-2026 | http://www.sanitana.com/products/single-lever-shower-mixer-S502118000###00?sku=S50211800012600