

DITTO

Single lever bathtub mixer

DIMENSIONS

Length	181 mm
Width	154 mm
Height	119 mm

COLOURS AND FINISHES

126 Chrome

FEATURES

For wall-mounted installation (bathtubs). Ceramic disk cartridge. Single lever. Flow reductor integrated on flexible hose. In the packaging: faucet, handheld shower, support, 150cm flexible hose and fixing kit.

Length: 181 mm

Width: 154 mm

Height: 119 mm

Application place: Bathtub

Diverter: Manual

Excentrics included

Faucet type: Single-lever

Flexible supply hoses included

Flow rate (l/min - 3 bar): 12

Installation type: Wall-mounted

Type of cartridge: Single lever ceramic

Warranty Domestic Use: 5 years

Water connection thread: 1/2" - 1/2"

Water flow restrictor

TECHNICAL DRAWINGS

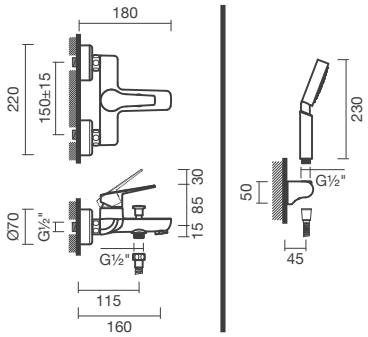

© Copyright 2026, Sanitana S.A - All rights reserved | 24-11-2026 | http://www.sanitana.com/products/single-lever-bathtub-mixer-S502119000###00?sku=S50211900012600





DITTO



Ditto faucet collection offers a contemporary design with a slimline handle and a striking chrome finish. Available in 7 models, each faucet features ceramic cartridges and water and energy-saving technologies for ultimate efficiency.

INSTALLATION AND USER MANUALS

Installation Handbook

Product Technical Fact Sheet - Documents

© Copyright 2026, Sanitana S.A - All rights reserved | 24-11-2026 | http://www.sanitana.com/products/single-lever-bathtub-mixer-S502119000###00?sku=S50211900012600