

WEZA

Floor-standing vanity 80 for Alur 81 recessed ceramic washbasin

DIMENSIONS

Length	800 mm
Width	451 mm
Height	846 mm

COLOURS AND FINISHES

035 Textured walnut

TECHNICAL DRAWINGS

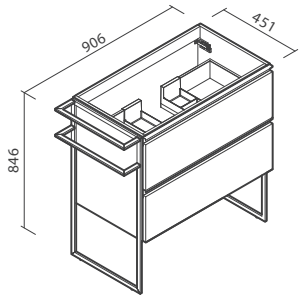

FEATURES

80cm floor-standing vanity unit, with two drawers and towel rail, with organiser for small items. Hidden runner technology with cushioned opening and closing (pull to open). Compatible with Alur 81 recessed ceramic washbasin (not included). Anodised aluminium handles (matt black). In the packaging: vanity unit and fixing kit.

Length: 800 mm

Width: 451 mm

Height: 846 mm

Basin position: Central

Closing and opening system: Soft close drawers

Commodity Code/Import Code Number for Foreign Trad: 94036090

Doors and drawers combination: 2 Drawers

External shelves: 0

Faucet position: Central

Included legs: 0

Installation type: With legs

Internal dividers

Internal shelves: 0

Material: Melamine

Net weight (kg): 28

Towel rail included

Washbasin type: Vanity

© Copyright 2026, Sanitana S.A - All rights reserved | 24-11-2026 | http://www.sanitana.com/products/floor-standing-vanity-80alur-81recessed-ceramic-washbasin-S702104031###00?sku=S70210403103500









© Copyright 2026, Sanitana S.A - All rights reserved | 24-11-2026 | http://www.sanitana.com/products/floor-standing-vanity-80alur-81recessed-ceramic-washbasin-S702104031###00?sku=S70210403103500









WEZA

Embrace an industrial-modern style with the New Weza floor-standing vanity units. Featuring a sleek black metal frame, with integrated towel holder, internal organizer, and generous storage space, they are available in three sizes and two finishes – dark oak or walnut – and pair perfectly with Alur washbasins.



© Copyright 2026, Sanitana S.A - All rights reserved | 24-11-2026 | http://www.sanitana.com/products/floor-standing-vanity-80alur-81recessed-ceramic-washbasin-S702104031###00?sku=S70210403103500

INSTALLATION AND USER MANUALS

Installation Handbook

Product Technical Fact Sheet - Documents

© Copyright 2026, Sanitana S.A - All rights reserved | 24-11-2026 | http://www.sanitana.com/products/floor-standing-vanity-80alur-81recessed-ceramic-washbasin-S702104031###00?sku=S70210403103500