

MOBIL

Folding toilet support bar 800 without toilet roll holder

DIMENSIONS

Length	800 mm
Width	220 mm
Height	95 mm

COLOURS AND FINISHES

011 Brushed stainless steel

TECHNICAL DRAWINGS

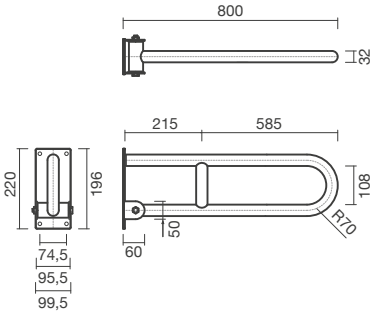

FEATURES

Wall-mounted application, with screws. Made of stainless steel. Supports up to a maximum weight of 150kg. In the packaging: bathroom accessory and fixing kit.

Length: 800 mm

Width: 220 mm

Height: 95 mm

Finish: Stainless steel

Fixing kit: Included

Folding

Installation options: Only with screws

Installation type: Wall-mounted

Maximum weight supported (Kg): 150

© Copyright 2026, Sanitana S.A - All rights reserved | 24-11-2026 | http://www.sanitana.com/products/folding-toilet-support-bar-800without-toilet-roll-holder-S902137274###00?sku=S90213727401100

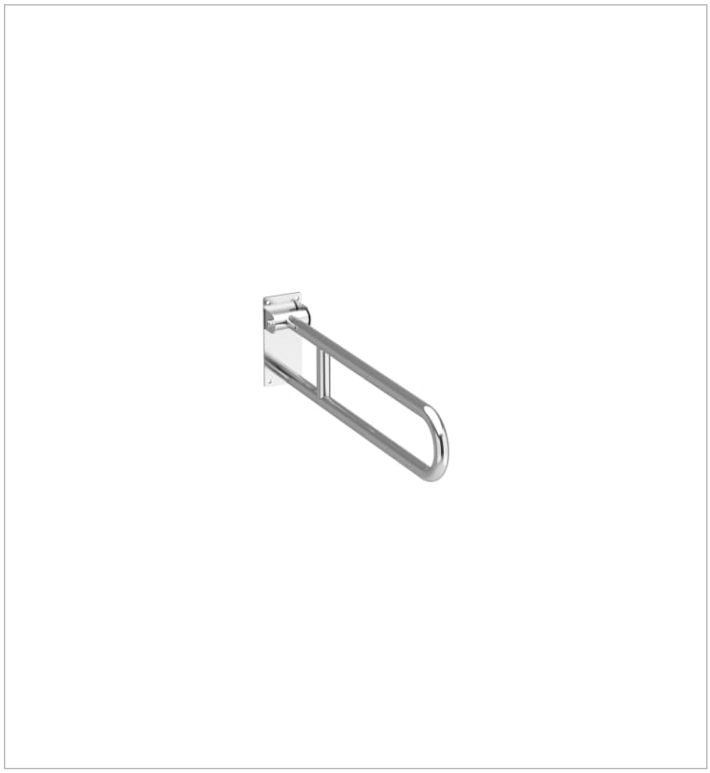





MOBIL

Mobil is a practical and specialized sanitaryware and accessories collection designed for users with reduced mobility. With functional, ergonomic, and durable design, it offers comfort, accessibility, and safety for greater independence daily.

© Copyright 2026, Sanitana S.A - All rights reserved | 24-11-2026 | http://www.sanitana.com/products/folding-toilet-support-bar-800without-toilet-roll-holder-S902137274###00?sku=S90213727401100

INSTALLATION AND USER MANUALS

Installation Handbook

Product Technical Fact Sheet - Documents

© Copyright 2026, Sanitana S.A - All rights reserved | 24-11-2026 | http://www.sanitana.com/products/folding-toilet-support-bar-800without-toilet-roll-holder-S902137274###00?sku=S90213727401100