

INSIDE

Recessed cistern for floor-standing toilet or floor-standing BTW toilet

TECHNICAL DRAWINGS

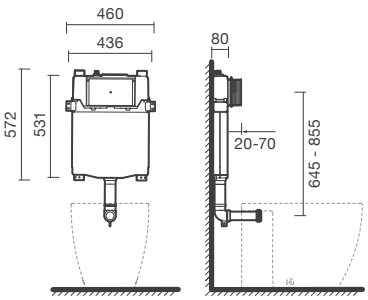

FEATURES

For floor-standing toilets or floor-standing BTW toilets. In-wall installation (recessed). Fixes to wall. Suitable for drywall / masonry. Cistern with condensation-resistant insulation and 3/6 liters flush capability (adjustable to 3/4,5 or 2/4 liters). Compatible with Inside flush plates. In the packaging: cistern, connections, shut-off valve and fixing kit.

Length: 530 mm

Width: 730 mm

Height: 100 mm

Adjustable flushing volume: Dual flush 3/5 litres

Dynamic pressure range: 1,5 - 5 Bar

Flush volume preset: Dual flush 3/6 litres

Minimum fixation depth (mm): 80

Operating plate position: Frontal

Suitable for: Floorstanding toilet

Tank depth (mm): 80

Water inlet position: Top

© Copyright 2026, Sanitana S.A - All rights reserved | 24-11-2026 | http://www.sanitana.com/products/recessed-cistern-floor-standing-toilet-floor-standing-btw-toilet-SI0200359500000?sku=SI0200359500000





INSIDE



Inside is one of Sanitana most technologically advanced systems of toilets and bidets installation systems, featuring solutions for both masonry and drywall constructions, with reduced installation depths compared to convencional systems.

INSTALLATION AND USER MANUALS

Installation Handbook

Product Technical Fact Sheet - Documents

© Copyright 2026, Sanitana S.A - All rights reserved | 24-11-2026 | http://www.sanitana.com/products/recessed-cistern-floor-standing-toilet-floor-standing-btw-toilet-SI0200359500000?sku=SI0200359500000