INSIDE

Freestanding installation module for wall-mounted toilet



TECHNICAL DRAWINGS

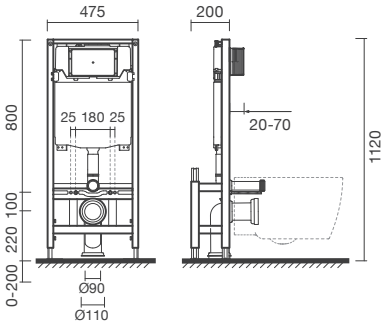

FEATURES

For wall-mounted toilets. In-wall installation (recessed). Fixes to the floor (freestanding). Suitable for drywall. In thermo-lacquered steel. Cistern with condensation-resistant insulation and 3/6 liters flush capability (adjustable to 3/4,5 or 2/4 liters). Compatible with Inside flush plates. In the packaging: installation module, connections, shut-off valve and fixing kit.

Length: 1120 mm

Width: 220 mm

Height: 510 mm

Adjustable flushing volume: Dual flush 3/5 litres

Dynamic pressure range: 1,5 - 5 Bar

Elbow connection: DN100 (110 mm)

Flush volume preset: Dual flush 3/6 litres

Minimum fixation depth (mm): 220

Suitable for: Wall-hung toilet

Tank depth (mm): 80

Water inlet position: Top

© Copyright 2026, Sanitana S.A - All rights reserved | 24-11-2026 | http://www.sanitana.com/products/freestanding-installation-module-wall-mounted-toilet-SI0200779300000?sku=SI0200779300000





INSIDE



Inside is one of Sanitana most technologically advanced systems of toilets and bidets installation systems, featuring solutions for both masonry and drywall constructions, with reduced installation depths compared to convencional systems.

INSTALLATION AND USER MANUALS

Installation Handbook

Product Technical Fact Sheet - Documents

© Copyright 2026, Sanitana S.A - All rights reserved | 24-11-2026 | http://www.sanitana.com/products/freestanding-installation-module-wall-mounted-toilet-SI0200779300000?sku=SI0200779300000